| DASH NO. | M CODE | MADE FROM |
|---|---|---|
| -1 | M99 | PERFORATED STRIP ON ROLL |
| -2 | M99 | INDIVIDUAL, CUT SHEETS, FOLDED |

KINGS ELECTRONICS CO. INC. TUCKAHOE, NEW YORK

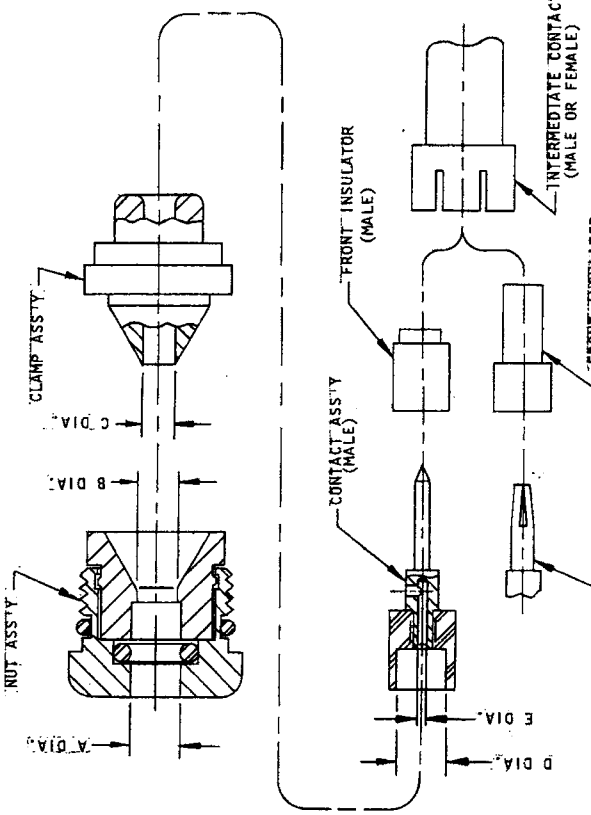


| MILITARY NO. | KINGS NO. | A | B | C | D | E |
|---|---|---|---|---|---|---|
| M49142/03-0008 | 1995-14-5 | .14 | .11 | .09 | .11 | .03 |
| M49142/05-0008 | 1992-11-5 | .14 | .11 | .09 | .11 | .03 |
| M49142/08-0006 | 1945-7-5 | .14 | .11 | .09 | .11 | .03 |
| M49142/09-0006 | 1942-7-5 | .14 | .11 | .09 | .11 | .03 |

1. CUT CABLE END SQUARE. TRIM CABLE AS SHOWN IN FIGURE 1 AND SECURE BRAID ENDS WITH SCOTCH "MAGIC" TAPE.

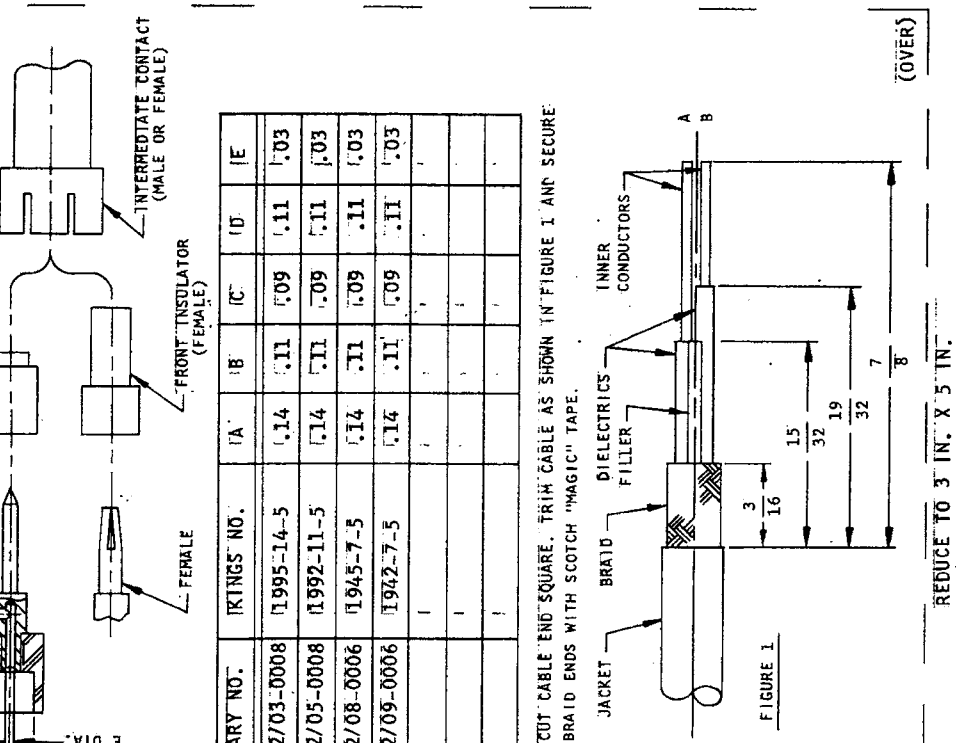


FIGURE 1

(OVER)

3-395

REDUCE TO 3 IN. X 5 IN.

NOTES:
1. INSTRUCTION SHEET TO BE WHITE SULPHUR FREE PAPER AND TO BE FOLDED IN HALF (3 IN. X 2 1/2 IN.)

3-395 (SHEET 1 OF 2)

| REVISIONS | |
|---|---|
| ISSUE | CHANGES |

SCALE

APPROX. SURFACE AREA

USED ON

REF

CABLING INSTRUCTIONS

| | |
|---|---|
| DRAWN KH | DATE 12AUG88 |
| APPR. | DATE 8-24-88 |
| APPR. | DATE |

KINGS ELECTRONICS CO. INC TUCKAHOE, NEW YORK 10707

3-395 (SHEET 1 OF 2)

UNLESS OTHERWISE SPECIFIED:
1. TOLERANCES: FRACTIONS & 2 PLACE DECIMALS ± .010
   3 PLACE DECIMALS ± .004 ANGLES ± 0°30'
   T. I. R. CONCENTRICITY OF ANY 2 DIAMETERS MAY NOT EXCEED HALF THE SUM OF THEIR TOLERANCES.
2. REMOVE ALL BURRS, BREAK SHARP EDGES .005 MAX.
3. NO FILLETS PERMITTED.
4. SURFACE ROUGHNESS 63 MICROINCHES RMS MAX.
5. ALL DIMENSIONS PRIOR TO PLATING.
6. ALL PLATING IN ACCORDANCE WITH KER 10004.

MAY 2007 THIS DRAWING BECAME THE PROPERTY OF PROPERTY OF
WINCHESTER ELECTRONICS CORPORATION, WALLINGFORD, CT 06492

| DASH NO. | M CODE | MADE FROM |
|---|---|---|

3-395 (SHEET 2 OF 2)

2. INSERT CABLE INTO NUT ASSEMBLY BUTTING JACKET EDGE AGAINST INTERNAL SHOULDER. REMOVE TAPE AND FLARE BRAID AGAINST NUT ASSEMBLY INTERNAL TAPER. SLIDE CLAMP ASSEMBLY OVER DIELECTRICS AND FILLERS PRESSING FIRMLY AGAINST FLARED BRAID AS SHOWN IN FIGURE 2.

3. TRIM INNER CONDUCTOR A TO 3/16 AND FOLD BACK OVER CLAMP ASSEMBLY (FIGURE 2). TRIM INNER CONDUCTOR B TO 9/32 (FIGURE 2).

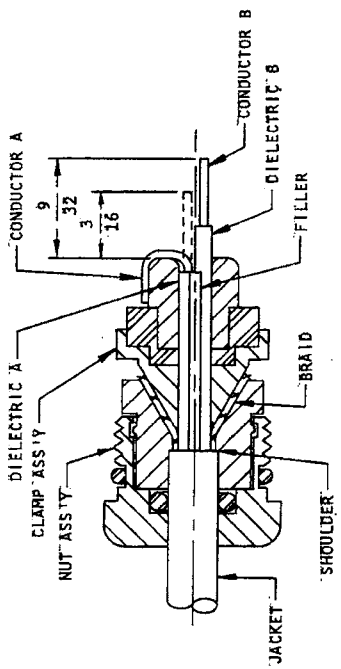


FIGURE 2

4. PLACE CONTACT ASSEMBLY OVER DIELECTRIC AND INNER CONDUCTOR B AND SOLDER CONTACT TO INNER CONDUCTOR B AS SHOWN IN FIGURE 3.

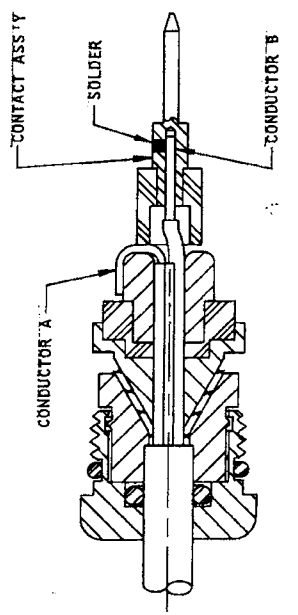


FIGURE 3

5. PLACE FRONT INSULATOR ON CENTER CONTACT AND ASSEMBLE INTERMEDIATE CONTACT PRESSING INNER CONDUCTOR A AGAINST CLAMP ASSEMBLY AS IN FIGURE 4.

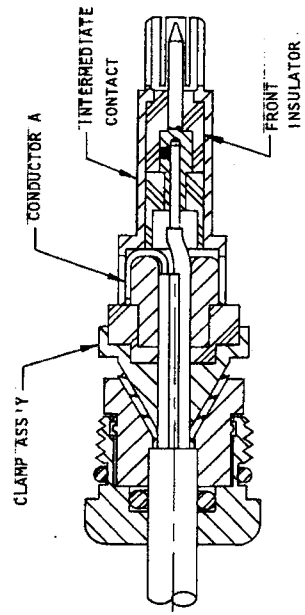


FIGURE 4

6. INSERT PARTS INTO BODY ASSEMBLY AND TIGHTEN CLAMP NUT SECURELY. RECOMMENDED TORQUE 30 - 35 INCH-POUNDS.

(OVER)

REDUCE TO 3 IN. X 5 IN.

3-395

UNLESS OTHERWISE SPECIFIED:

1. TOLERANCES: FRACTIONS & 2 PLACE DECIMALS ± .010
   3 PLACE DECIMALS ± .004 ANGLES ± 0°30'
   T. I. R. CONCENTRICITY OF ANY 2 DIAMETERS MAY NOT EXCEED HALF THE SUM OF THEIR TOLERANCES.
2. REMOVE ALL BURRS, BREAK SHARP EDGES .005 MAX.
3. NO FILLETS PERMITTED.
4. SURFACE ROUGHNESS 63 MICROINCHES RMS MAX.
5. ALL DIMENSIONS PRIOR TO PLATING.
6. ALL PLATING IN ACCORDANCE WITH KER 10004.

REVISIONS

| ISSUE | CHANGES |
|---|---|

SCALE

APPROX. SURFACE AREA

USED ON

REF

CABLING INSTRUCTIONS

| | | | |
|---|---|---|---|
| DRAWN | KH | DATE | 12AUG88 |
| APPR | [signature] | DATE | 8-24-88 |
| APPR. | | DATE | |

KINGS ELECTRONICS CO., INC. TUCKAHOE, NEW YORK 10707

3-395 (SHEET 2 OF 2)

MAY 2007 THIS DRAWING BECAME THE PROPERTY OF PROPERTY OF WINCHESTER ELECTRONICS CORPORATION, WALLINGFORD, CT 06492